DYCI
SMART SOLUTIONS

Electric Strike Door Opener

Specification

Model	Size	Voltage	Current	Feature	Suitable for	Weight
ED1134E12	110Lx24Wx28.5H	DC12V	12V/280mA	Fail Secure(NO)	Woodeng door Metal door	0.28kg
ED1134E24	110Lx24Wx28.5H	DC24V	24V/160mA	Fail Secure(NO)	Woodeng door Metal door	0.28kg
ED1134EW12	66Lx24Wx25.5H	DC12V	12V/280mA	Fail Secure(NO)	Woodeng door Metal door	0.28kg
ED1134EW24	66Lx24Wx25.5H	DC24V	24V/160mA	Fail Secure(NO)	Woodeng door Metal door	0.28kg

Diagram(unit:mm)

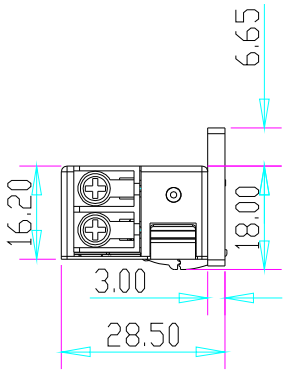

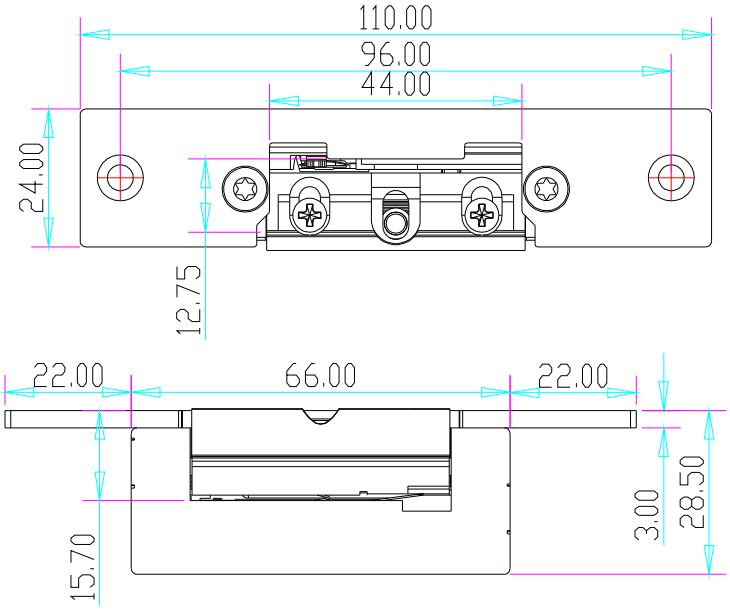

Installtion

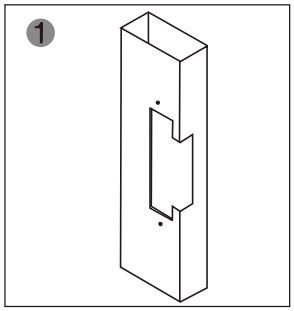

Cut hole according to the dimension of strike.

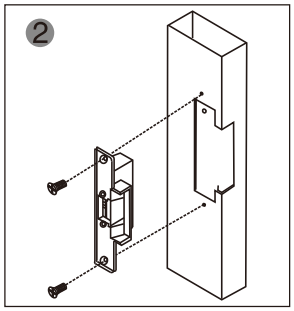

Assemble the lock and connect it to the power to test

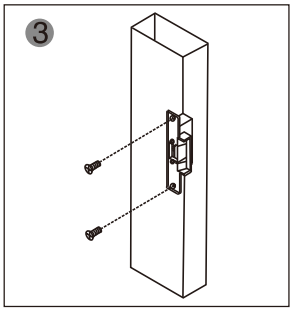

Fix the electric strike

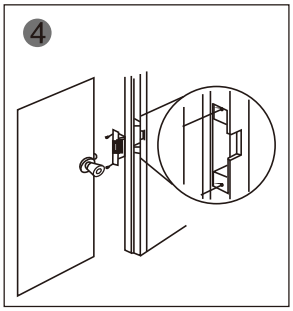

Finished

Suitable for

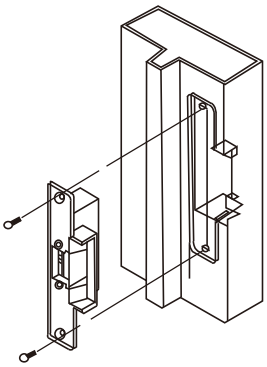

Metal Door Frame

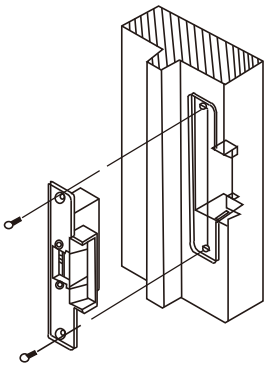

Wooden Door Frame

Installtion

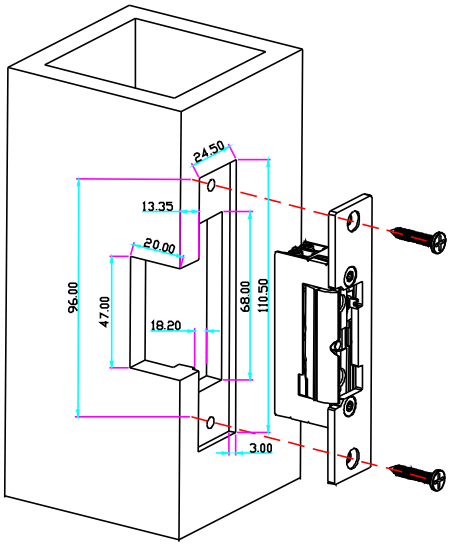
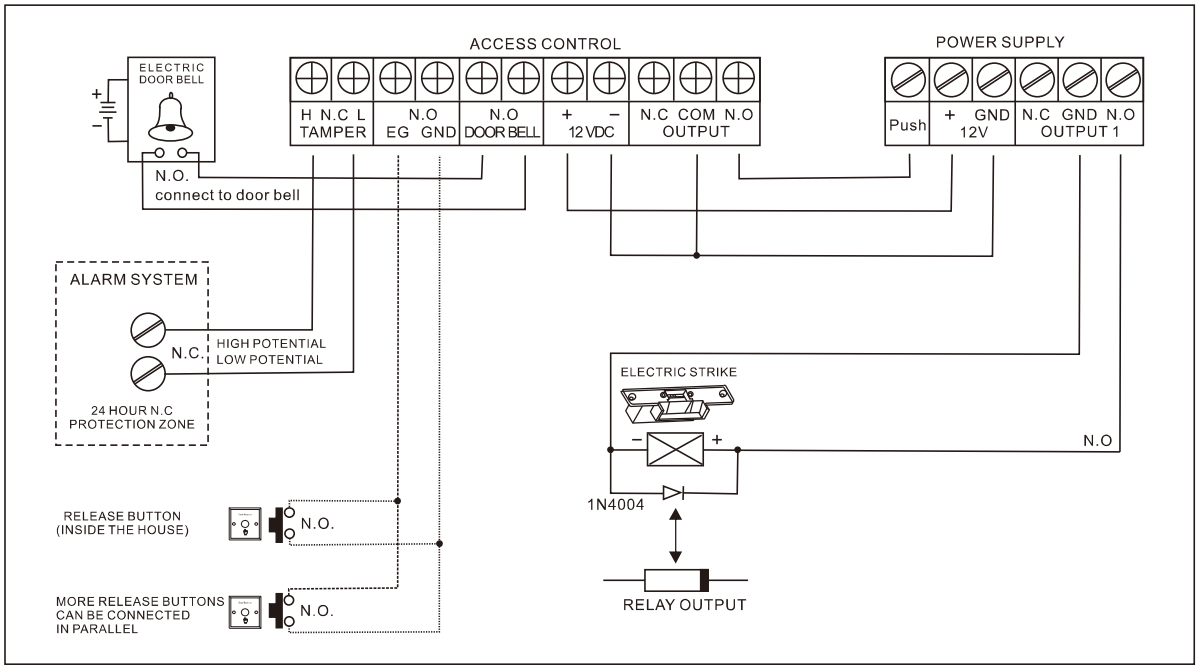
Wire connection